8-Port HDMI HDbitT Extender 1080p - 120m

G4-0106C

P/N: HDbitT8Pv2

Thank you for purchasing from gofanco. Our products aim to meet all our connectivity needs wherever you go. For optimum performance and safety, please read the instructions carefully and keep this User's Guide for future reference. If you need more information about our products, please visit **www.gofanco.com**.

For technical support, email us at **support@gofanco.com**.
For drivers or manual download, please go to **www.gofanco.com/downloads**.

Important Safety Notices

Please read safety instructions carefully before installation and operation.

- Please pay close attention to all warnings and hints for this device.
- Do not expose this unit to rain, heavy moisture, or liquid.
- Do not put any items into the device or attempt to modify its operation.
- Do not repair the device or open the enclosure without professional guidance to avoid electric shocks. Doing so may void your warranty.
- Keep the product in a well-ventilated location to avoid damage from overheating.
- Shut off power and make sure environment is safe before installation.
- Do not plug the HDMI cables and IR cables in/out when the device is in use to avoid cable damage. Make sure they are plugged into the correct ports.
- Use the included power adapters only. Make sure the specification matches if using 3rd-party DC power adapters.

Table of Contents

1. Introduction 4
2. Features 4
3. Installation Requirements 5
4. Package Contents 5
5. Product Layout 6
6. Specifications 8
7. Hardware Installation 9
8. Cat Cable Writing 10
9. Connection Diagram 11
   9.1 Direct Connection 11
   9.2 OverIP Networks 12
10. FAQ and Solutions 13
11. Disclaimer 15

1. Introduction

The 8-Port HDMI HDbitT Extender 1080p - 120m extends high definition 1080p signals up to 394ft (120m) over CAT6 to 8 monitors with IR support. It supports a direct connection (transmitter to receivers) or over IP networks.

2. Features

- 8-Port HDMI Extender/Splitter Kit with 1 Transmitter (TX) and 8 Receivers (RX)
- Extends HDMI signals up to 120m (394ft) over CAT6 to 8 HDMI monitors simultaneously
- Direct TX to RXs connection or through a Gigabit Ethernet switch. Additional RX's, part number HDbitTv2-RX, sold separately
- Supports up to 1080p@60Hz
- Supports IR signal extension - control a media player from a remote location with the included IR Blaster and IR Receiver cables
- Surface mountable metal housing

3. Installation Requirements

- HDMI source device (DVD player, set top box, PC, etc.)
- HDMI display devices (SDTV/Monitor, HDTV/ Monitor, projector, etc.)
- HDMI cables (not included)
- UTP/STP Cat6/6A/7 cable, following IEEE-568B wiring standard

4. Package Contents

- 8-Port HDMI HDbitT Extender 1080p - 120m (1 TX & 8 RXs)
- IR Blaster cable (1pc)
- IR Receiver cable (8pcs)
- Power adapter 12V/3A (1pc)
- Power adapter 5V/1A (8pcs)
- User Manual

5. Product Layout

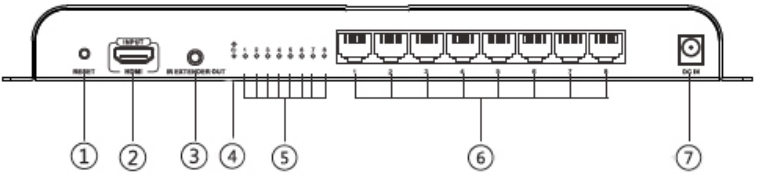

Figure 1: Transmitter (TX)

No.	Name	Function Description
1	Reset	Press to reset the Transmitter
2	HDMI In	Connects to the HDMI source device
3	IR Out	Infrared 3.5mm socket. Plug the IR Blaster Cable here. See instructions on page 9
4	Data LEDs	Blink when data transfer is detected
5	Link LEDs (x8)	Light up when RJ45 signal is detected
6	RJ45 Outs (x8)	Connect to the Receiver's RJ45 In using a Cat6 cable
7	Power Jack	Connect the included 12V/3A power adapter here

Product Layout (Continued)

Figure 2: Receiver (RX)

No.	Name	Function Description
1	Reset	Press to reset the Receiver
2	HDMI Out	Connects to your HDMI display with an HDMI cable (cable not included)
3	IR In	Connects to the IR Receiver cable
4	Power Jack	Connects to the included power adapter
5	Power LED	On when the Receiver is powered
6	RJ45 In	Connects to the RJ45 of the Transmitter using a CAT cable
7	Data LED	Blinks during data transmission
8	Link LED	On when CAT cable is connected/ linked properly to Transmitter's and Receiver's RJ45

6. Specifications

HDMI signal	HDMI 1.3, HDCP 1.4
Input	TX: 1x 19-pin HDMI, Female RX: 1x RJ45, 1x IR, 3.5mm socket
Output	TX: 8x RJ45, 1x IR, 3.5mm socket RX: 1x 19-pin HDMI, Female
Resolution	480i@60Hz, 480p@60Hz, 576i@50Hz, 576p@50Hz, 720p@50/60Hz, 1080i@50/60Hz, 1080p@50/60Hz
Transmission distance	Up to 394 ft (120m)
IR signal	20KHz - 60KHz
Operating temperature	32° F - 140° F (0° - 60° C)
Power adapter	TX: 12V DC/3A RX: 5V DC/1A

7. Hardware Installation

To achieve optimal performance, Cat6 cable is recommended.

1. Power off all devices including your HDMI source and HDMI display(s).
2. Connect your HDMI source to the Transmitter's HDMI In connector with an HDMI cable (HDMI cable not included).
3. Optional: Connect the IR Blaster Cable to the Transmitter's IR Out port. Face the eye towards your HDMI source device's IR window. This connection is needed only if you need to control your HDMI source at the remote location.
4. Plug your Cat6 cable between the Transmitter's RJ45 Out and Receiver's RJ45 In. Repeat this step for each Receiver connected.
5. Connect an HDMI display to each Receiver's HDMI Out connector with an HDMI cable (HDMI cables not included).
6. Optional: Connect the IR Receiver Cable to the Receiver's IR In port. This connection is needed only if you need to control your HDMI source at the remote location. Repeat this step for each Receiver connected.
7. Plug the included 12V/3A power adapter into the Transmitter's Power Jack.
8. Plug the included 5V/1A power adapter into the Receiver's Power Jack, then plug all power adapters into reliable power outlets. Repeat this step for each Receiver connected.
9. Power on your HDMI source device and HDMI displays. The extender is ready for use.

8. Cat Cable Writing

We suggest both RJ45 connectors be wired identically using T568B wiring standard for the best performance and compatibility.

Both connectors must be wired identically, to T568B standard.

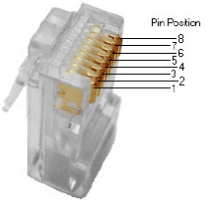

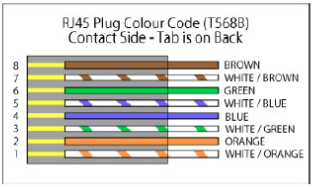

Note: *You may use cat5e, cat6 UTP (cat6 preferred) in conjunction with the HDBitT output; however for best performance use cat6a or cat7 (particularly in electrically noisy environments). The maximum distances & transmission performance for HDMI and HDBT may be compromised by cable quality, patch panels, poor termination, wall plates, cable kinks and electrical interferences. Generally ensure the cat cable is solid copper core of 23AWG (avoid CCA type), in one straight run (avoid/minimise patches) and avoid close proximity to any noisy electrical sources.*

9. Connection Diagram

9.1 Direct Connection

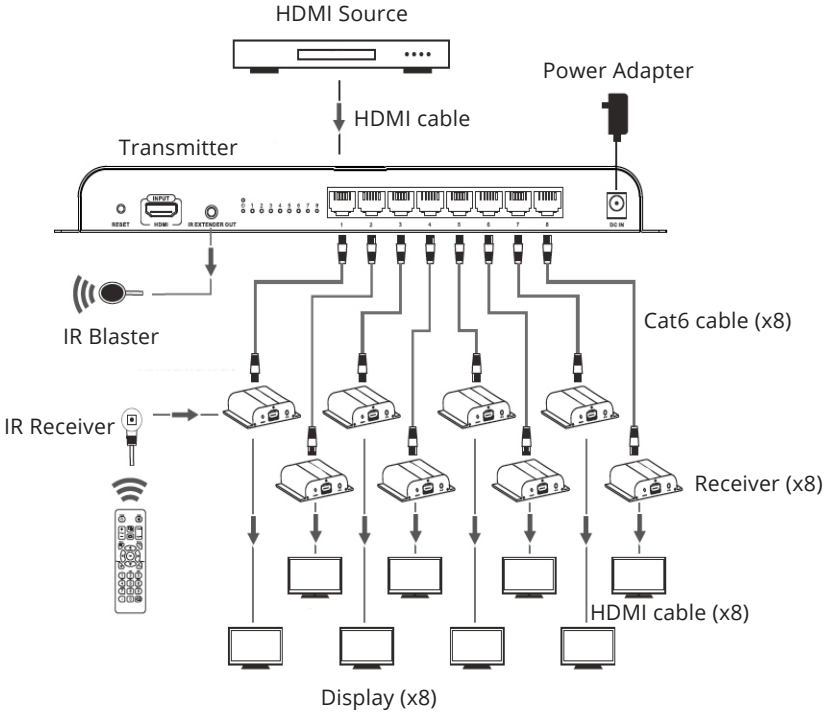

Figure 3: Connection Diagram

9. Connection Diagram (Continued)

9.2 OverIP Networks

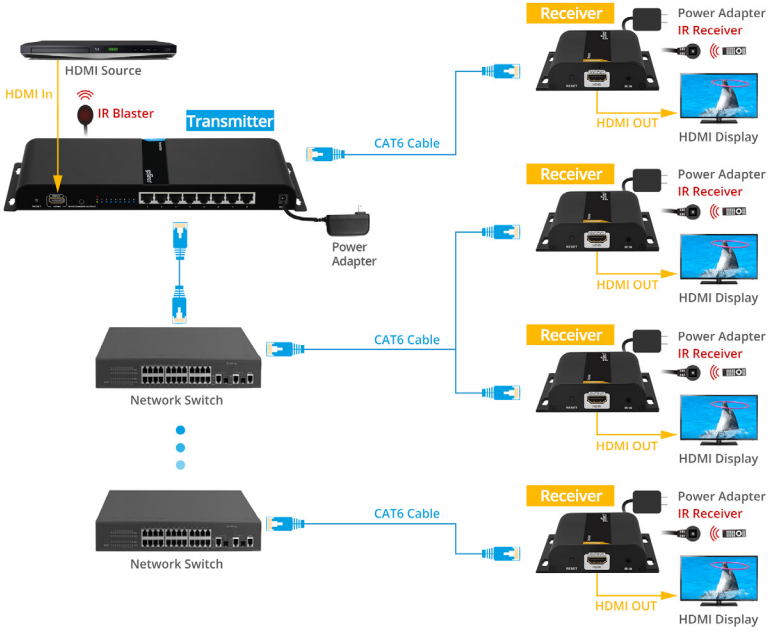

Figure 4: Connection Diagram

Notes:

- Supports connection through a Dedicated Gigabit Switch. If deployed within an existing network, create a VLAN to segregate our devices (TX and RXs) from the rest of the network devices
- Additional RXs, part number HDbitTv2-RX, sold separately

10. FAQ & Solutions

Q: No image or audio output on the display?

A: 1. Check if the display is in standby mode.

2. Make sure the display's HDMI port is properly connected to the HDMI cable.

3. Check the Link LED indicator on the Receiver is on.

Q: Not all displays are receiving a signal.

A: 1. Check the Cat6 cables for secure and solid connection.

2. Press the Reset button on the Transmitter and Receiver to reset the system.

3. Re-connect the Cat6 cable(s) corresponding to the display(s) that are not working properly.

Q: TV displays "Waiting for Connection" on the bottom right corner.

A: 1. Check the Cat6 cables for secure and solid connection.

2. Check the power supply on both transmitter and receiver(s) is connected and powered on.

Q: TV displays "Please check the TX input signal".

A: 1. Please check the HDMI cable is connected properly and the HDMI source device is powered on.

2. Press the reset button on the Transmitter.

3. Connect the TV directly to the HDMI source device to verify there is signal output.

Blank Page

11. Disclaimer

The product name and brand name may be registered trademarks of related manufacturers. TM and ® may be omitted on the user's guide. The pictures on the user's guide are just for reference, and there may be some slight differences with the actual products. We reserve the right to make changes without prior notice to a product or system described herein to improve reliability, function, or design.

gofanco®

Thank you for choosing gofanco

www.gofanco.com